SEVA L

Vidima®

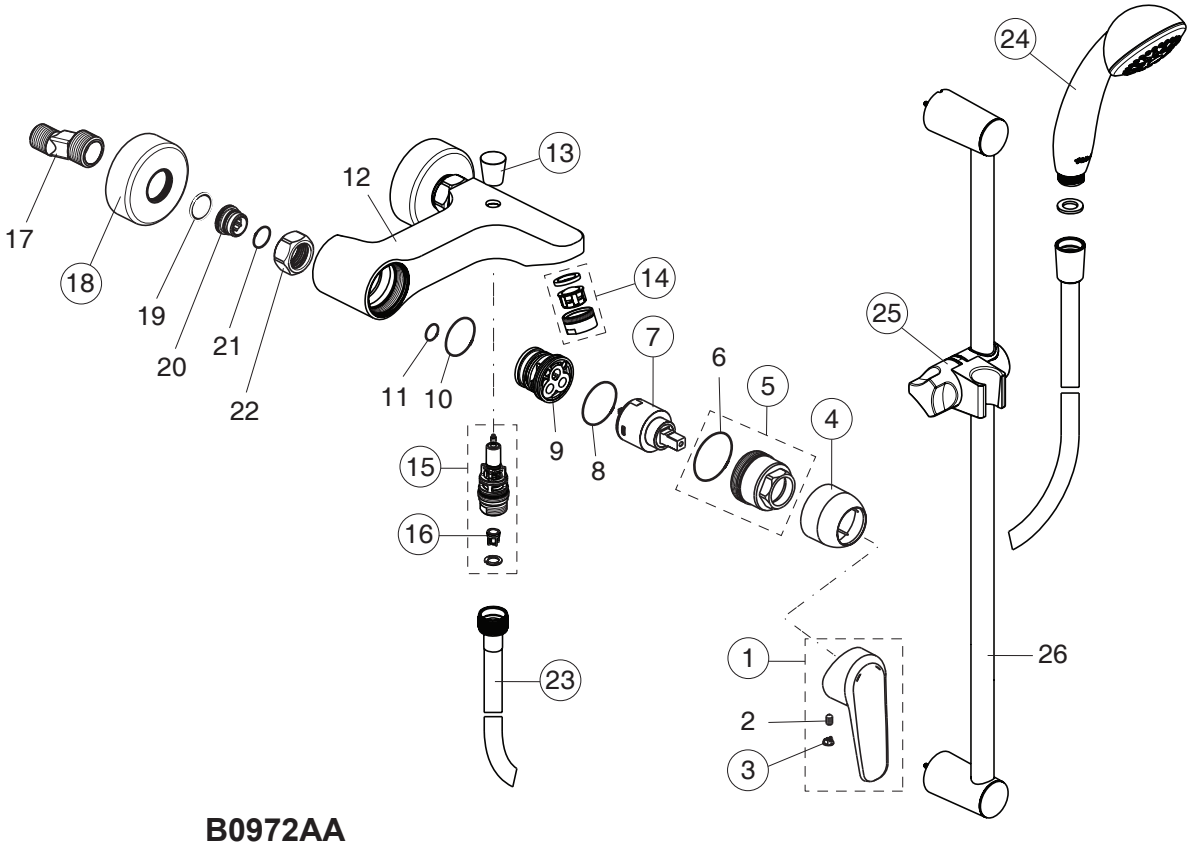

B0972AA

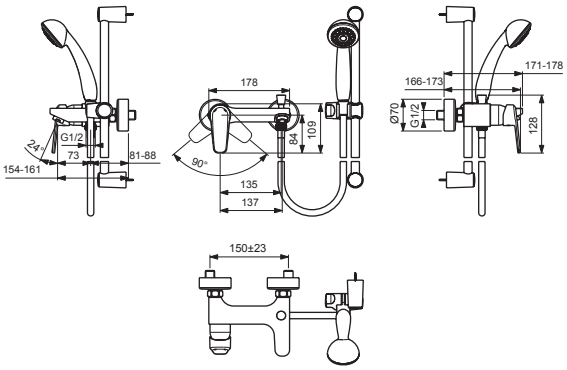

B0973AA

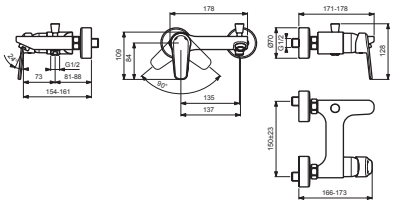

Pos.	Signify	Spare parts-Nr.	Quantity	Pos.	Signify	Spare parts-Nr.	Quantity
1	Lever,w/logo-compl.	B961279AA	1 Pcs.	15	Diverter manual	B960168AA	1 Pcs.
2	Screw M5x8		1 Pcs.	16	Rv-patrone	A960944NU	2 Pcs.
3	Cap decorative	B960473AA	1 Pcs.	17	S-connections		2 Pcs.
4	Rosette	B961229AA	1 Pcs.	18	Escutcheon	B960242AA	1 Pcs.
5	Screw M42x1.5	B961230NU	1 Pcs.	19	Fiber ring Ø24x15x2		2 Pcs.
6	O-Ring Ø39x1.6		1 Pcs.	20	Nipple M19x1.5LH		2 Pcs.
7	Cartridge GEAR N35DW	B960888NU	1 Pcs.	21	O-Ring Ø15.6x1.78		2 Pcs.
8	O-Ring Ø34x2		1 Pcs.	22	Coupling nut		2 Pcs.
9	Manifold		1 Pcs.	23	Shower hose L1500mm	B964952AA	1 Pcs.
10	O-Ring Ø27.6x2.4		1 Pcs.	24	Shower 70mm,1F	B9391AA	1 Pcs.
11	O-Ring Ø11x2.5		1 Pcs.	25	Sliding bar holder	B964958AA	1 Pcs.
12	Body bath/shower		1 Pcs.	26	Pipe-sliding bar		1 Pcs.
13	Pull knob	B960281AA	1 Pcs.				
14	Neop.cascade M24x1-D	A960537AA	1 Pcs.				

05.2016